Shaun Ruddy Portfolio

Meng. Mechanical and Industrial Engineering (University of Toronto)

BASc. Mechanical Engineering (University of Ottawa)

BSc. Computing Technology (University of Ottawa)

Computer Vision - Homography Mapping

Objective: Replace the CN Tower poster picture with the Soldiers tower image while maintaining perspective.

Methodology: Compute the homography matrix.

Perform inverse homography warping.

Results: Successfully mapped pixel points from the Soldiers Tower to the CN tower poster location while maintaining perspective.

Computer Vision – Stereo Vision

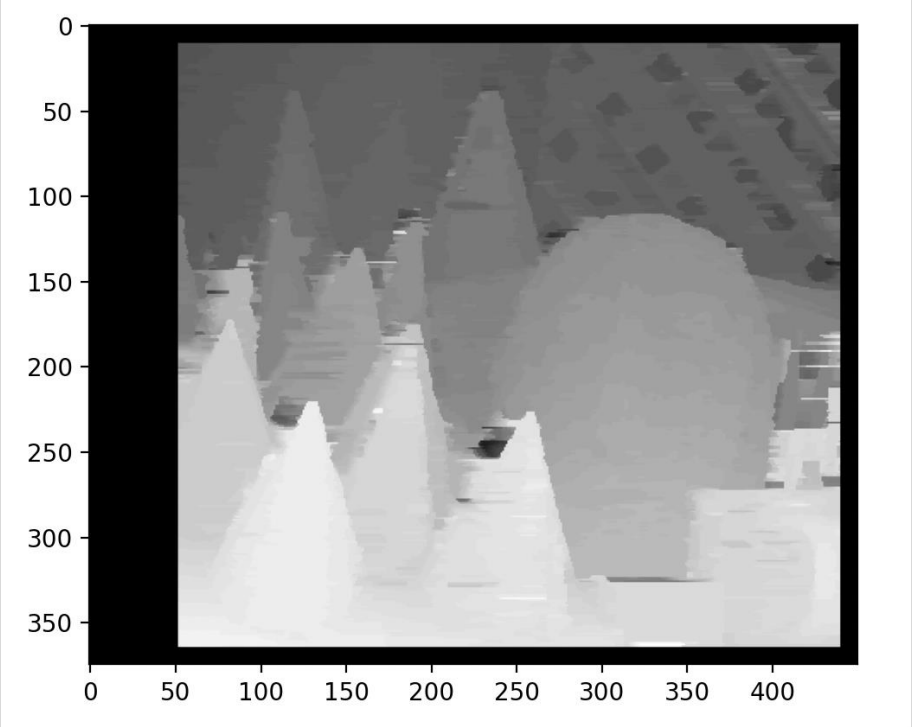

Objective: Perform depth estimation of points in world coordinates from pixel coordinates of two offset cameras of a single picture.

Methodology: Calculated the rowise disparity between similar pixel kernels. Output the depth on a colour scale knowing the depth is inversely proportional to disparity.

Results: Valid pixels: 133346

RMS Error: 4.17

Percentage Bad: 0.10

Robot Motion Planning RRT & RRT*

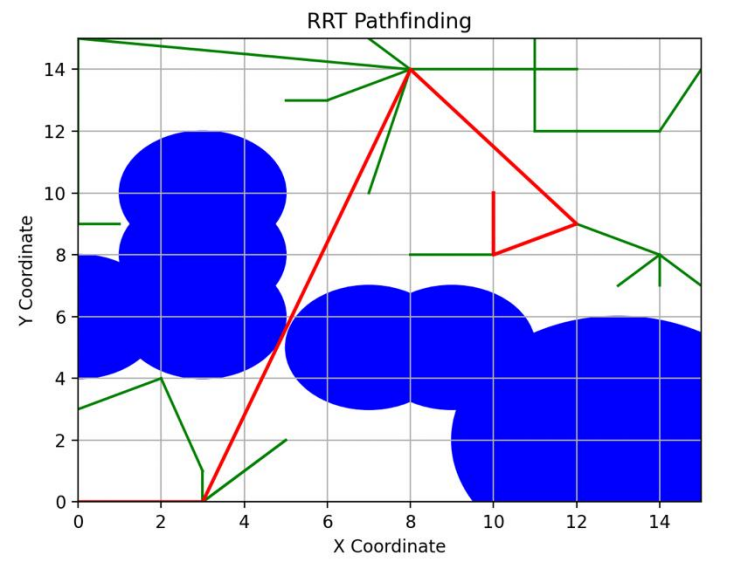

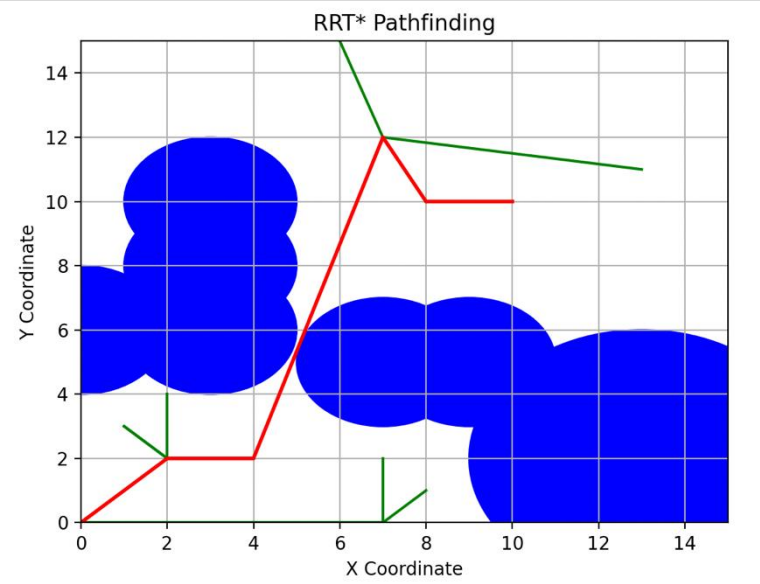

Objective: Develop two robot motion planning algorithms with knowledge of the workspace.

Methodology: Developed both RRT and RRT* algorithms. Green lines identify explored paths. Blue circle identify obstacles. Red line identifies path from start to end.

Results: Successfully created paths from start to end for both algorithms on all attempts for under 200 iterations.

Deep Learning Image Colourization

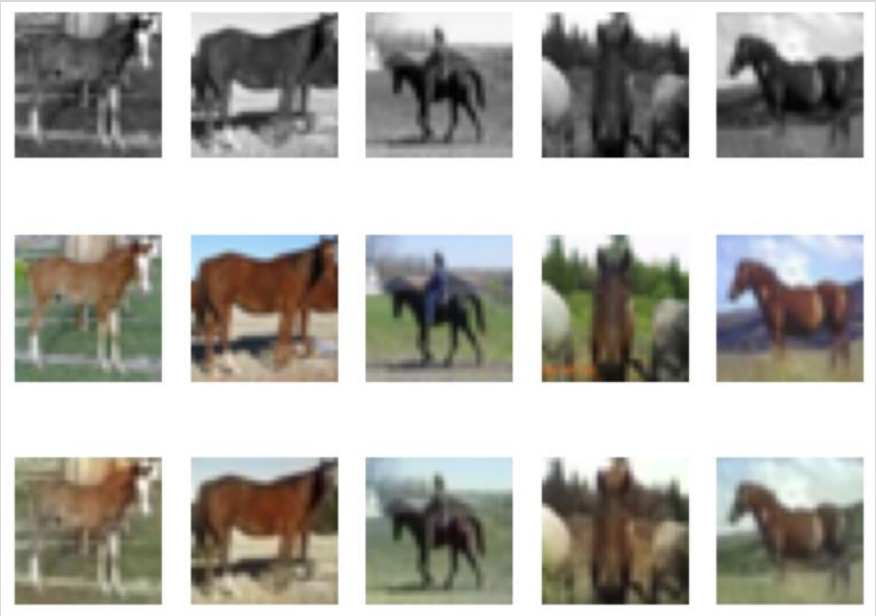

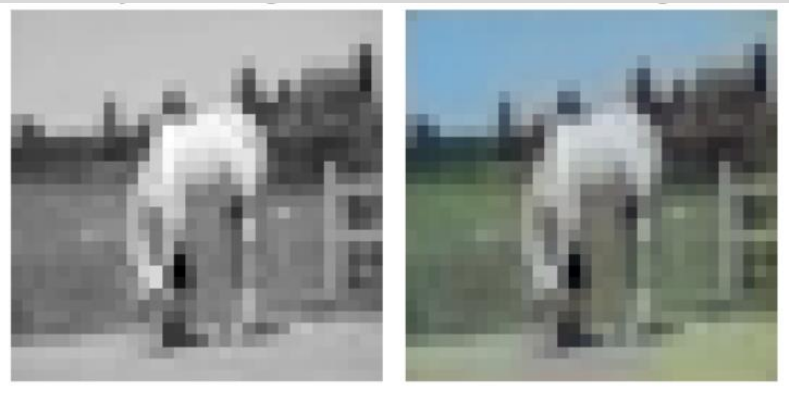

Objective: Construct a General Adversarial Network to colourize greyscale images.

Methodology: Transformed colourized images into greyscale images. Passed greyscale images and colourized images through an autoencoder.

Methodology: Utilized a discriminator to distinguish between true colourized pictures and colourized images by the autoencoder.

Results: Good colourization and low loss.

Capstone Design Project

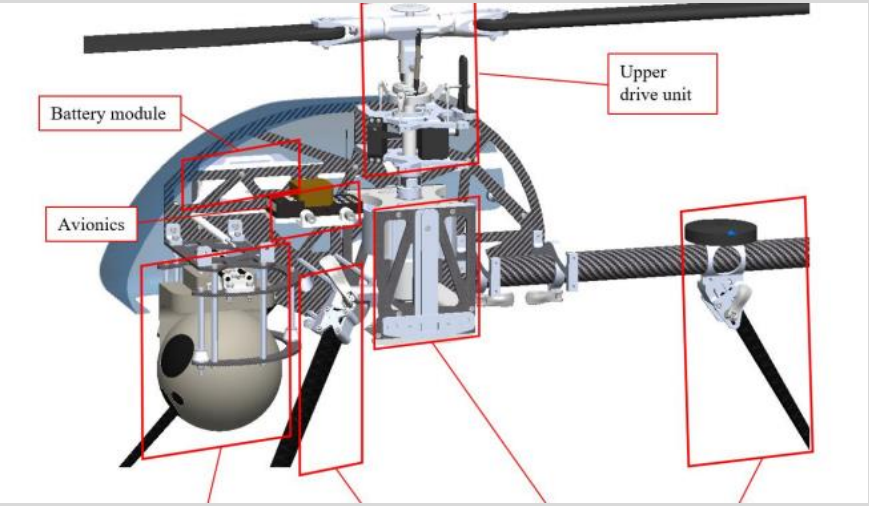

Objective: Design a fully electric UAV for image collection and surveillance purposes.

Design constraints:

- Total mass must be less than 25kg.
- Minimum Payload weight: 2kg.
- Maximum operating altitude: 15,000 ft.
- Withstand wind speeds up to 45 km/h.
- Top speed: 75 km/h
- 1 hour of flight time.

Main Drive Assembly

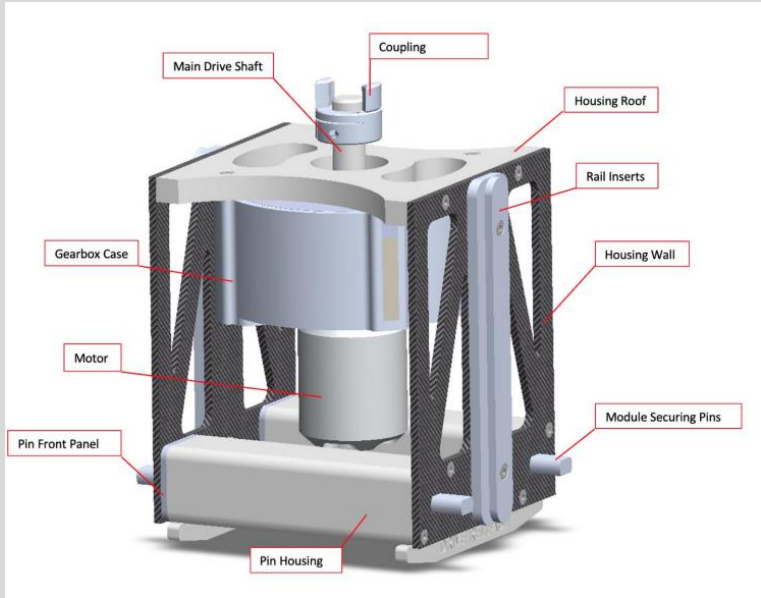

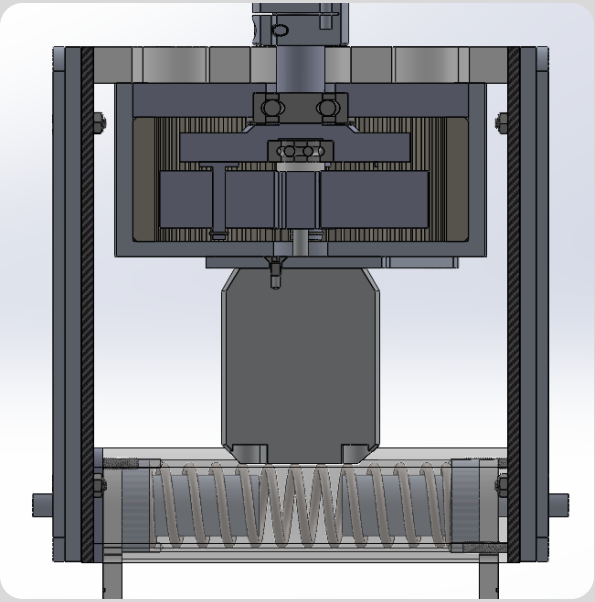

Consists of a speed reducing planetary gearbox, a pin retention system, an electric brushless motor, housing walls, and positioning rails.

Capable of supplying a lift force of twice the maximum weight of the UAV.

Utilized the lift equation to determine rotation speed and power requirements. Performed stress analysis on all parts to ensure robustness.